Your complimentary use period has ended. Thank you for using PDF Complete.
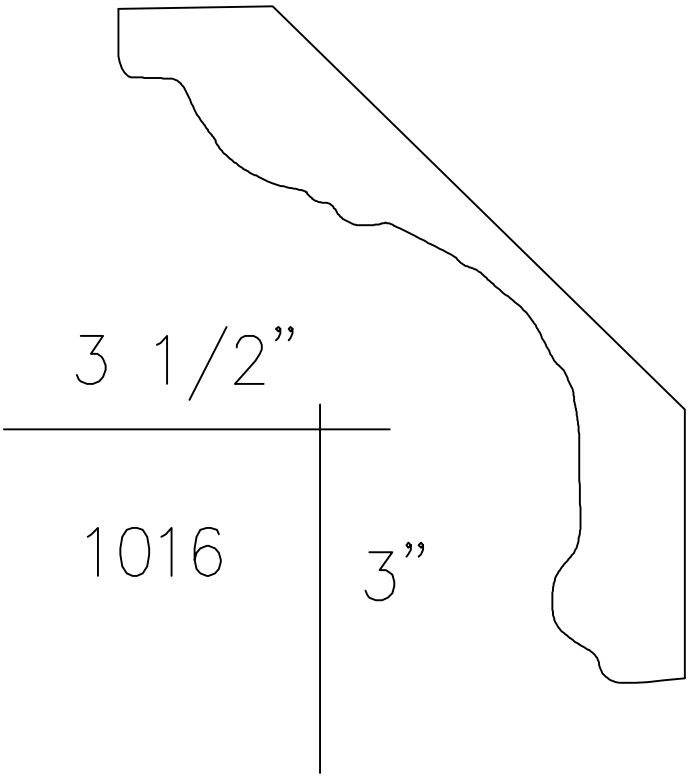
Click Here to upgrade to Unlimited Pages and Expanded Features